Technical Drawings

Single heat exchanger (60, 70 & 100)

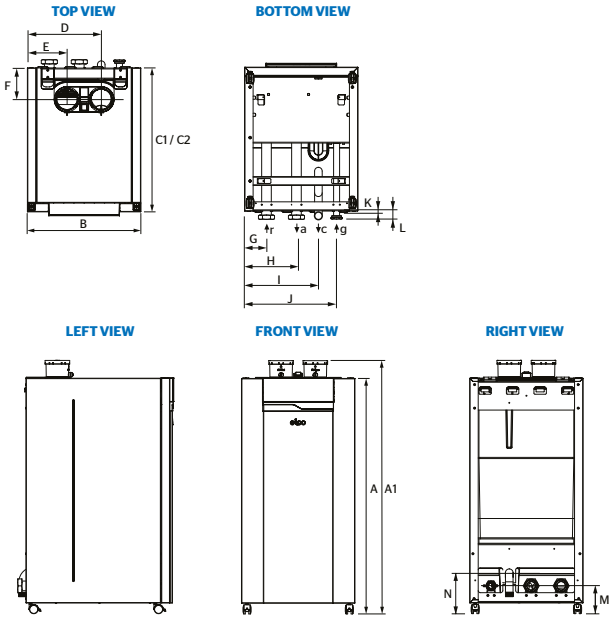

Double heat exchanger (120, 140, 170 & 200)

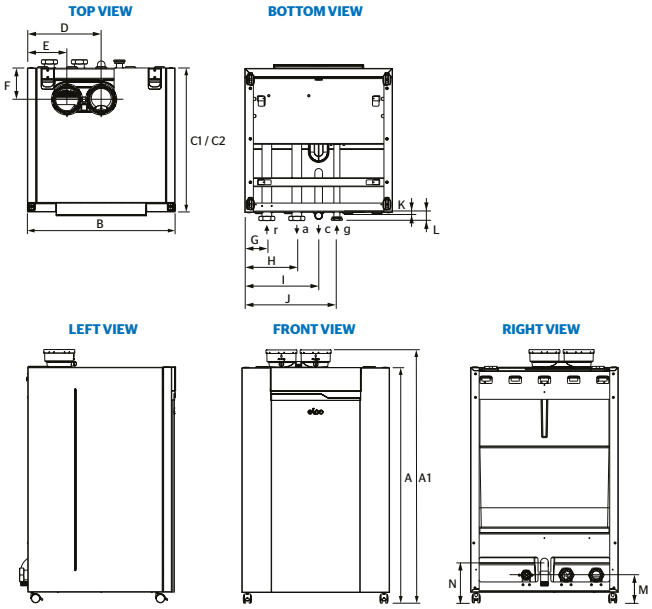

Clearances

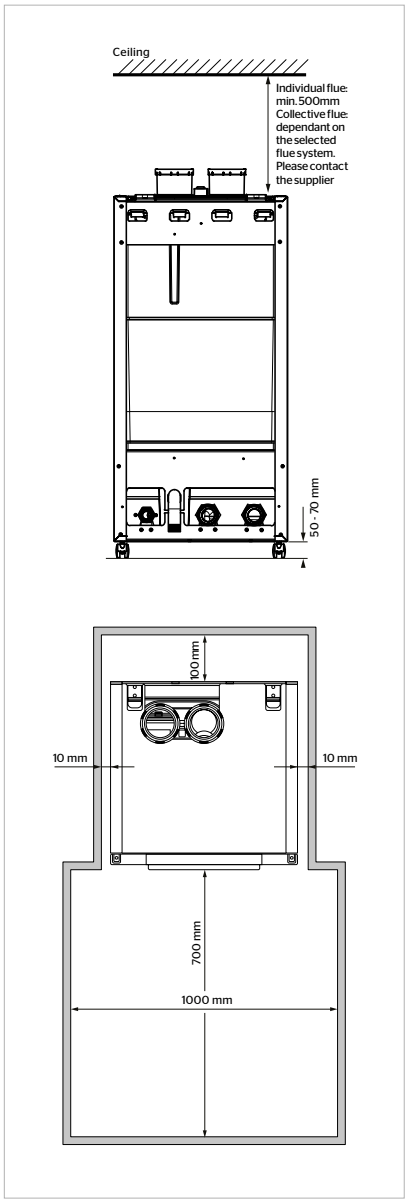

EVO PLUS		60	70	100	120	140	170	200
Dimensions								
Boiler height (A)	mm	1100	1100	1100	1100	1100	1100	1100
Boiler height with flue connection (A1)	mm	1185	1185	1185	1185	1185	1185	1185
Boiler width (B)	mm	530	530	530	690	690	690	690
Boiler depth (C1/C2)	mm	595	595	675	595	595	675	675
Flue gas nozzle parallel (D)	mm	345	345	345	345	345	345	345
Air intake parallel (E)	mm	185	185	185	185	185	185	185
Flue gas nozzle (F)	mm	150	150	150	150	150	150	150
Boiler return connection (G)	mm	103	103	103	103	103	103	103
Boiler flow connection (H)	mm	243	243	243	243	243	243	243
Condensate connection (I)	mm	345	345	345	345	345	345	345
Gas connection (J)	mm	430	430	430	430	430	430	430
Condensate connection (K)	mm	15	15	15	15	15	15	15
Boiler return-flow-gas (L)	mm	35	35	35	35	35	35	35
Boiler return-flow-gas (M)	mm	130	130	130	130	130	130	130
Condensate connection (N)	mm	190	190	190	190	190	190	190
Condensate connection (c)	mm	35	35	35	35	35	35	35
Parallel connection	mm	2x100	2x100	2x100	2x100	2x100	2x130	2x130
Boiler Flow (a) / Return (r) connection	-	2"	2"	2"	2"	2"	2"	2"
Gas connection (g)	-	1 ¼"	1 ¼"	1 ¼"	1 ¼"	1 ¼"	1 ¼"	1 ¼"